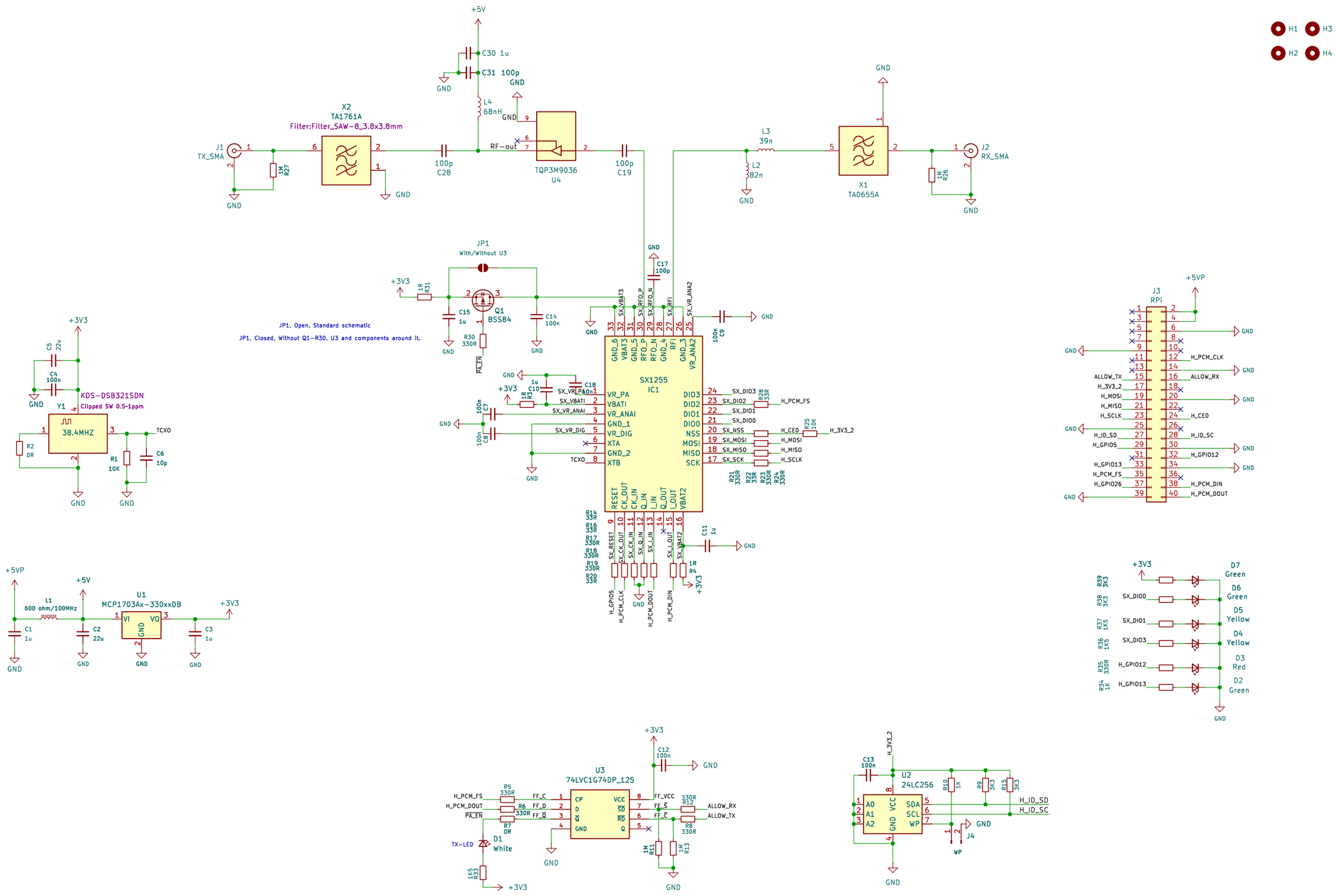

Modified SXceiver

Z32IT

Sheet: /

File: HAT with BandPass filters.kicad_sch

Title: HAT with BandPass filters

Size: A3	Date: 2026-03-16	**Rev: V1.4.3 Final**
KiCad E.D.A. 9.0.7		Id: 1/1